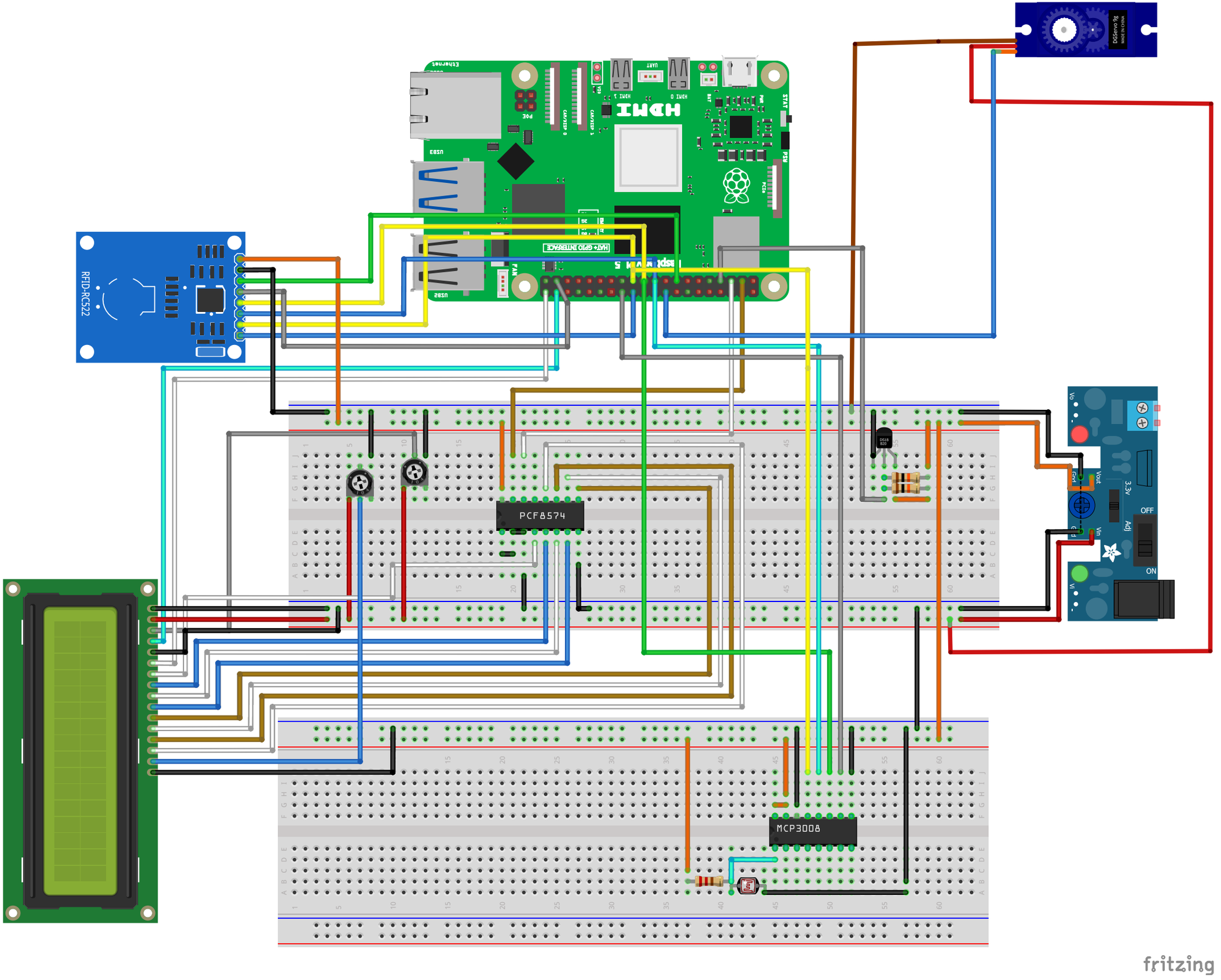
RFID-RC522
PCF8574
MCP3008
DGServo 9g
3.3v
OFF
ON
Adj
Vout
Vin
Gnd

fritzing